FOCI
上詮光纖通信

1.25G SFP CWDM

Features

- Support 1G Ethernet application
- Compliant to SFF-8472
- 18 CWDM wavelength from 1271nm to 1611nm
- +3.3V single power supply
- Duplex LC Connector Interface
- Hot Pluggable
- Transmission distance up to 80km
- Digital diagnostics functions are available via the I2C interface
- Operating case temp Commercial: 0°C to +70 °C (Special: 0°C to +85 °C)
- RoHS compliant

Applications

- Gigabit Ethernet Switches and Routers
- Other optical links

Absolute Maximum Ratings

Parameter	Symbol	Min.	Typical	Max.	Unit	Notes
Supply voltage	V_{CC}	0	-	3.6	V	
Storage temperature	T_{STG}	40	-	85	°C	
Operating humidity	RH_{OP}	5	-	95	%	

Mechanical Dimensions

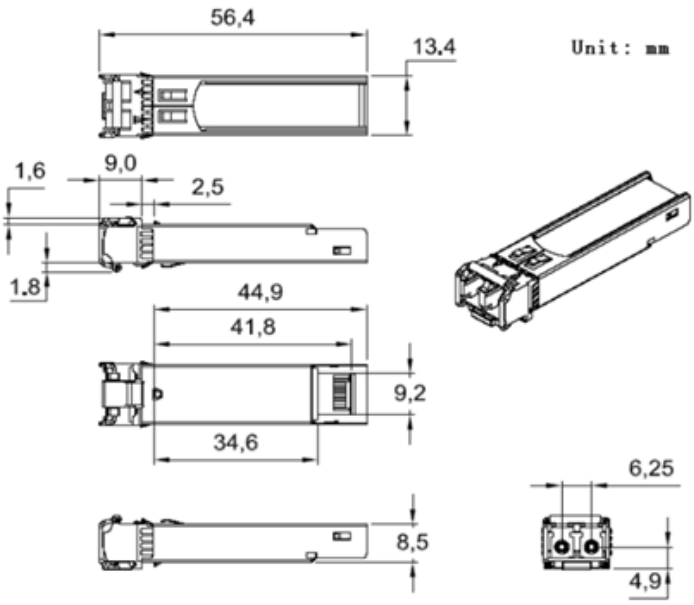

Fiber Optic Communications, Inc.
+886-3-5770099
sales@mail.foci.com.tw
NO. 18, Prosperity Road II, Science-Based Industrial Park, Hsinchu, Taiwan
http://www.FOCI.com.tw